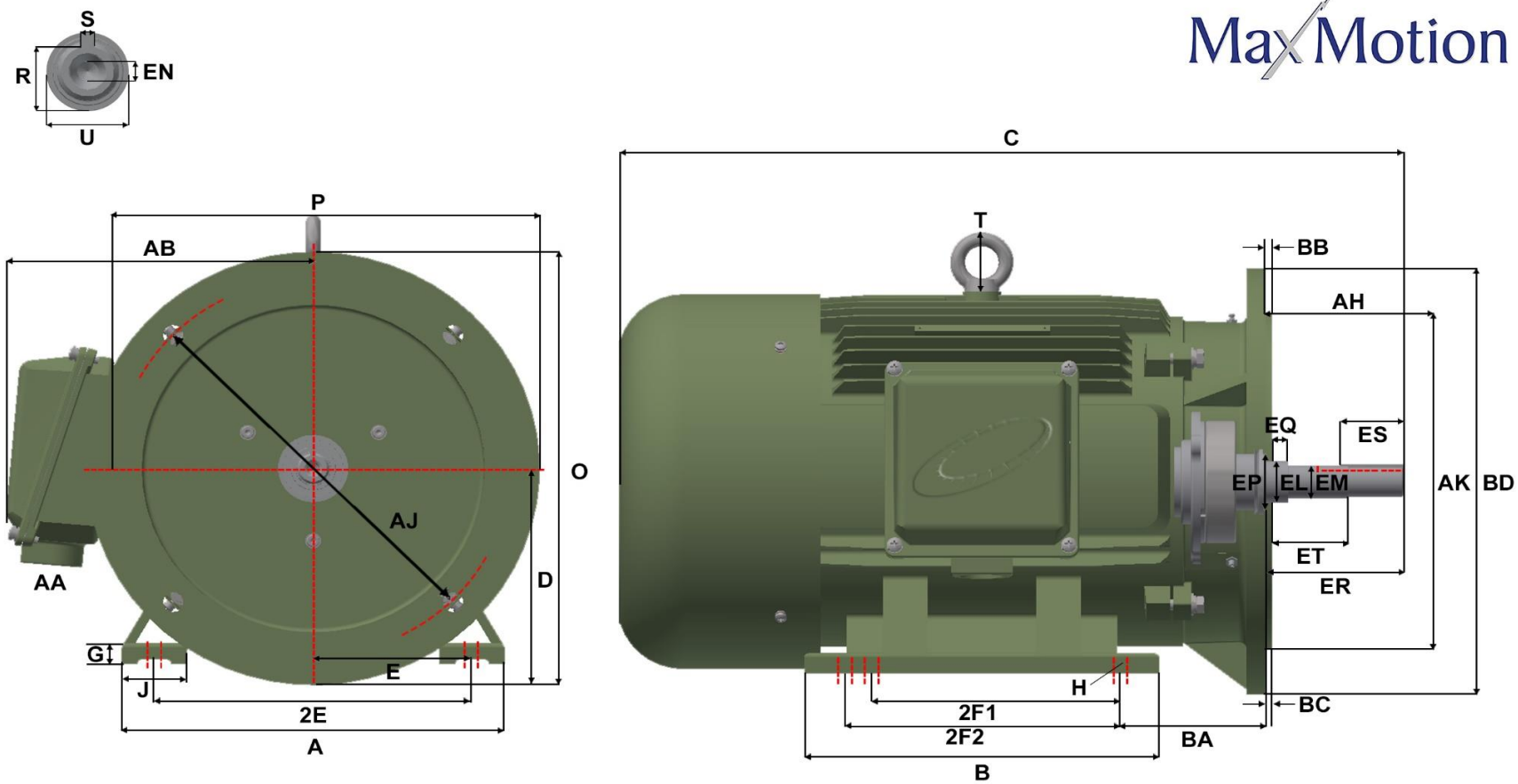

Version: 1WTI			Revised: 01-04-2020			HP	RPM	FRAME	ENCLOSURE	JMPP/JMQP-61			
Customer is responsible in determining that MEP product will fit/perform suitably in the intended application						50	3600	326JM	TEFC				
A	B	C	D	E	2E	2F1	2F2	G	H	J	O	P	R
15.50	14.70	31,55	8.00	6.25	12.50	10.50	12.00	1.00	0.66	2.75	15.90	15.70	1.112-1.097
S	T	U	AA	AB	AH	AJ	AK	BA	BB	BC	BD	EL	EM
0.252-0.250	2.60	1.2495-1.2490	2.00	12.30	5.25	11.00	12.500-12.495	5.25	0.312-0.250	0.25	14.00	1.750-1.748	1.3750-1.3745
EN	EP	EQ	ER	ES	ET								
1/2-13	2.36	0.645-0.605	5.281-5.219	2.53	3.020-2.980								